RoHS2.0 Compliant

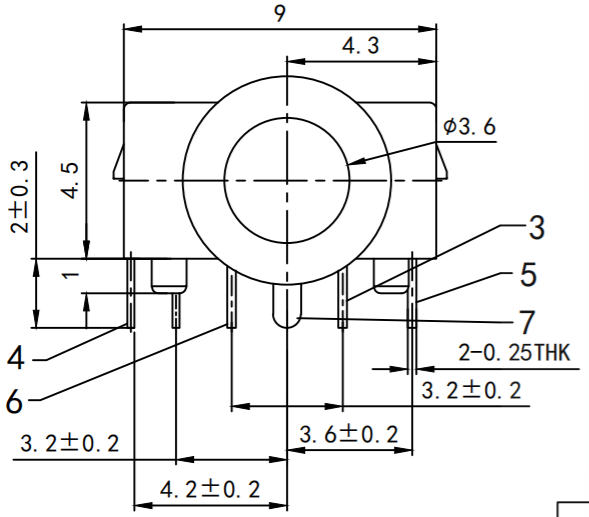

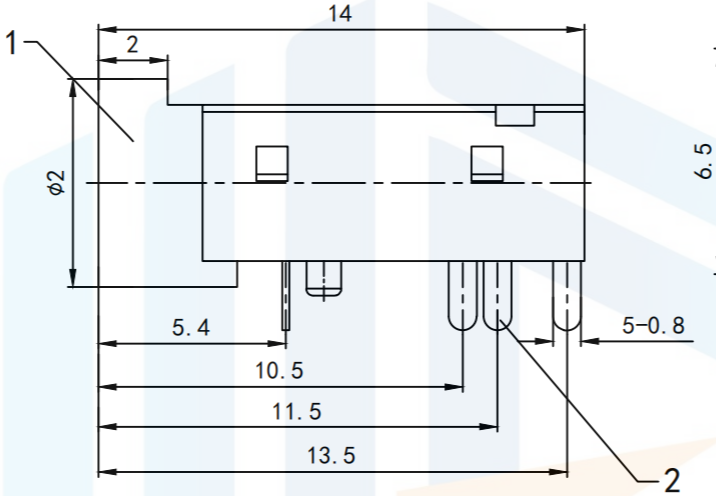

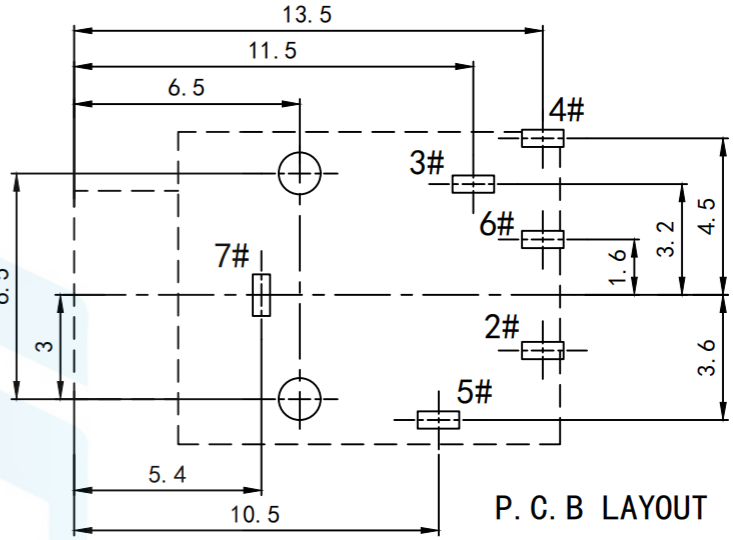

P.C.B LAYOUT

PJ-343	PJ-343-2	PJ-343-3	PJ-343-4
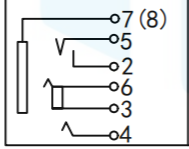	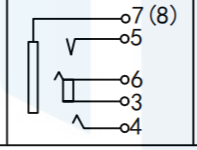	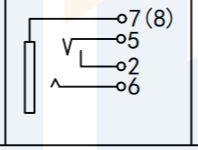	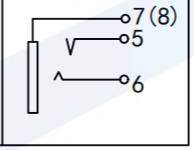

SCHEMATIC

Main technical performance
Rated electric load DC 30V \0.5A
Contact resistance S0.03Ω
Insulation resistance 2100MΩ
Withstand voltage AC500V(50Hz)/min
Insertion and withdrawal force 3-20N
Operating temperature range -30-70℃
Service life 5000 times

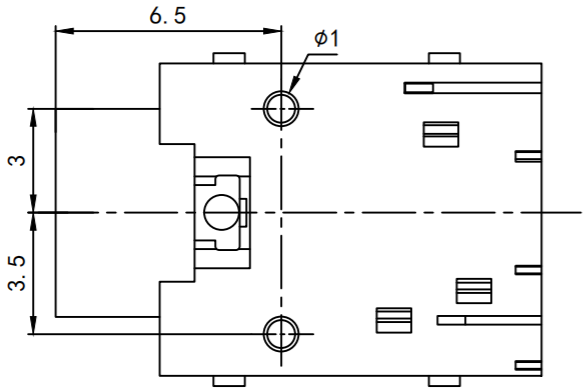

TOLERANCE	
X.XXX	±0.05
X.XX	±0.15
X.X	±0.20
X.	±0.30
ANGLE	±5.0°

PROTECTON

东莞市恒祺电子科技有限公司
Dongguan Hengqi Electronic Technology Co., Ltd

https://www.hq-dz.com phone:15812872448

TITLE: 耳机插座

PART NO:PJ-343-6P

DRAWING NO:14*9*4.5

DRAWN:		DATE:	18-10-08	UNIT: mm
CHECKED:		DATE:	18-10-08	SCALE: FULL
APPROVED:		DATE:	18-10-08	SIZE: A4